REVISIONS				
ZONE	REV.	DESCRIPTION	DATE	APPROVED

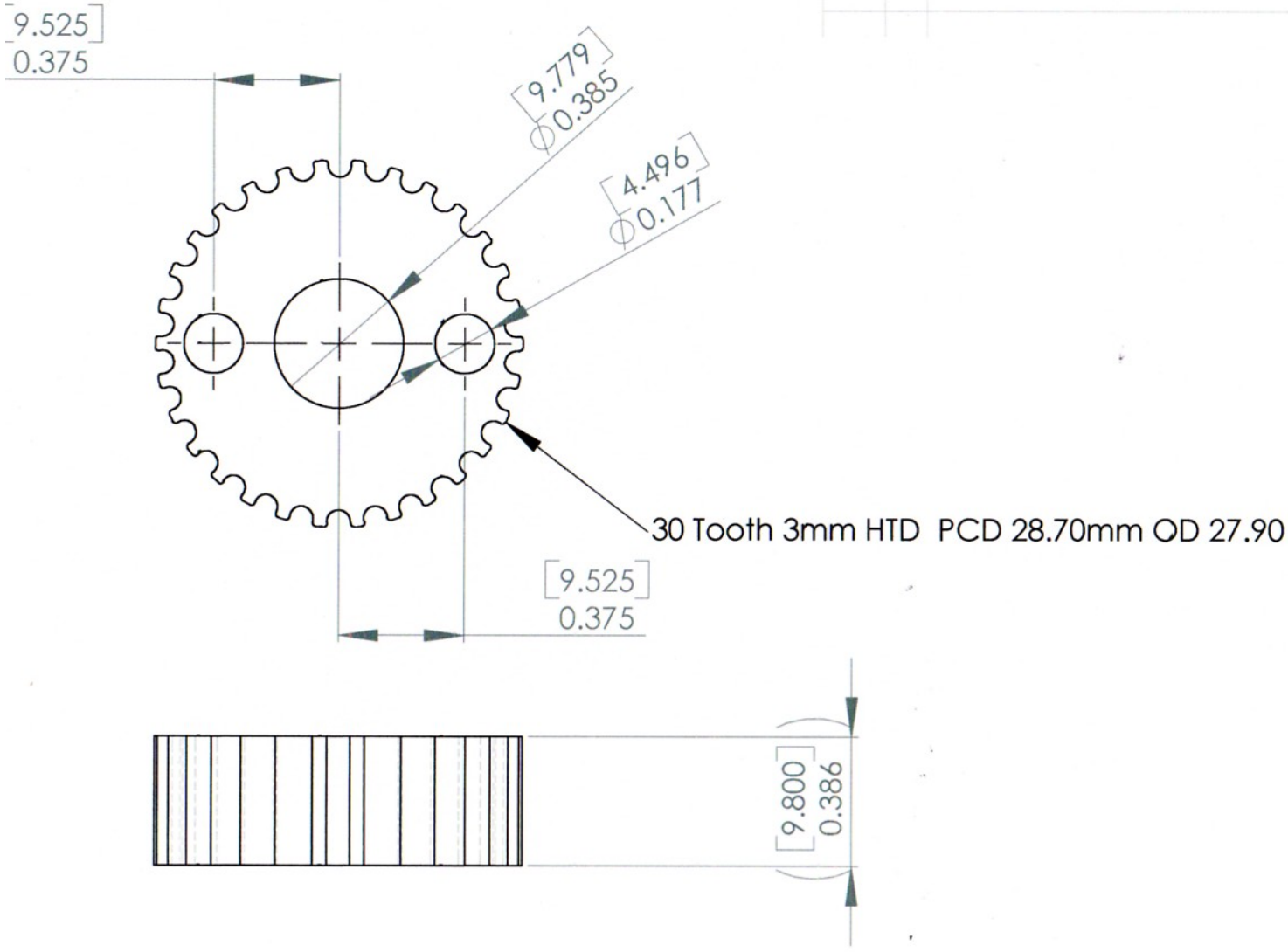

		DIMENSIONS ARE IN INCHES TOLERANCES: FRACTIONAL ± 0.005 ANGULAR: MACH ± BEND ± TWO PLACE DECIMAL ± THREE PLACE DECIMAL ±		NAME	DATE
			DRAWN	PAS	
			CHECKED		
			ENG APPR.		
			MFG APPR.		
		MATERIAL Aluminum	Q.A.		
NEXT ASSY	USED ON	FINISH None	COMMENTS:		
APPLICATION		DO NOT SCALE DRAWING			

PROPRIETARY AND CONFIDENTIAL
THE INFORMATION CONTAINED IN THIS DRAWING IS THE SOLE PROPERTY OF <INSERT COMPANY NAME HERE>. ANY REPRODUCTION IN PART OR AS A WHOLE WITHOUT THE WRITTEN PERMISSION OF <INSERT COMPANY NAME HERE> IS PROHIBITED.

Kitbots

30 tooth 3mm HTD Pulley

SIZE A | DWG. NO. | REV.

SCALE:2:1 | WEIGHT: | SHEET 1 OF 1